Air Ink Gun 2 Litre

Parts List		
STOCK No	DESCRIPTION	QTY
2M2044	Dump Valve Body	1
2S2007	O Ring	1
2S2038	O Ring	1
2S2150	Dump Valve Diaphragm	1
2S2155	Seal	1
3C1458	Front Cap	1
3C1463	Back Cap	1
3F3005	Cord Retainer Pin	1
3R4011	Plastic Backing Ring	1
3R4013	Reducer	1
4B1200	Air Gun Butt Assembly	1
7A1510	Single Turn Regulator (7bpsi)	1
7B4019	Barrel 338mm	1
7C1001	Air Gun Back Cap	1
7XS019	Barrel Strap Assembly (including screws/nuts)	1

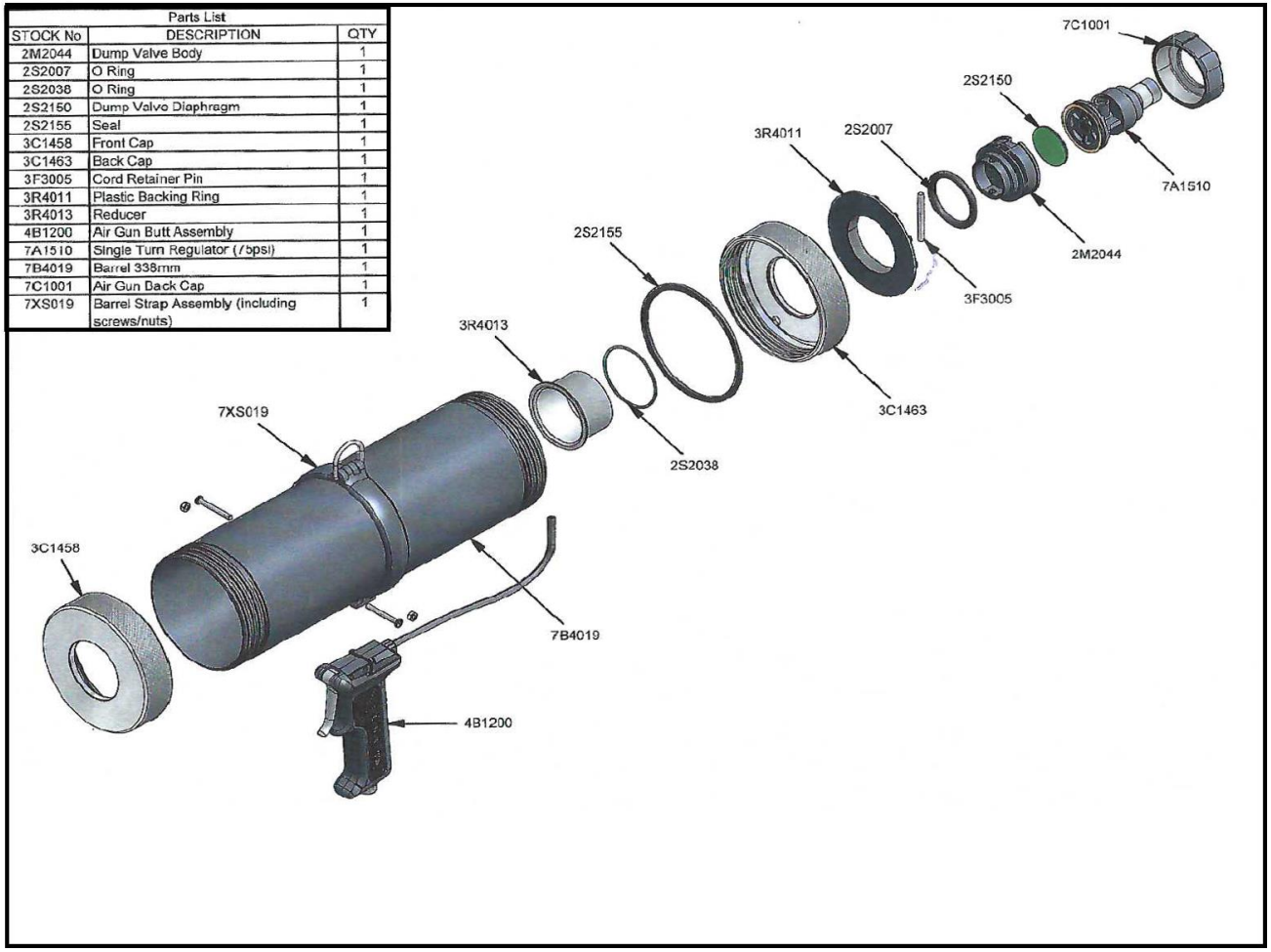

Ahes s.r.o.
https://www.ahestech.cz/